MODEL	DCX / NPM code	KVA @ 50% DC	PRIMARY VOLT/FREQ	SECONDARY VOLTAGE (DC) LO-TAP	SECONDARY VOLTAGE (DC) HI-TAP	TURNS RATIO LO-TAP	TURNS RATIO HI-TAP	WEIGHT KG
TDC-1078	91-901-1220	170	650/1000	9.5	13.0	68:1	50:1	45
TDC-5620	——	170	800/1000	9.5	13.1	84:1	61:1	45
TDC-6599	——	170	325/1000	9.5	13.0	34:1	25:1	45

COOLING REQUIREMENTS:
7.5 LPM PER CIRCUIT @ 30°C MAX
15 LPM TOTAL

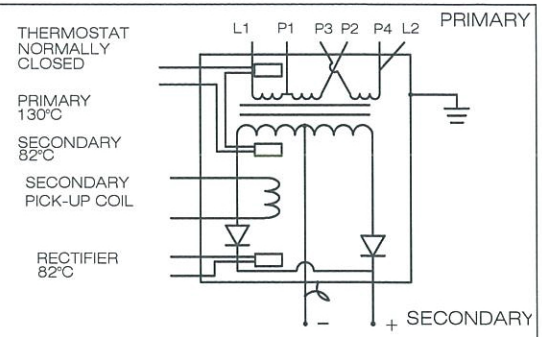

TRANSFORMER CASE MUST BE GROUNDED. TRANSFORMER WILL BE SHIPPED WITH A JUMPER CONNECTING SECONDARY CENTER TAP TO CASE. USER MUST PROVIDE APPROPRIATE GROUNDING OF SECONDARY CIRCUIT. FOR APPLICATIONS ABOVE A 20% DUTY CYCLE, CONTACT ROMAN MANUFACTURING FOR ASSISTANCE.

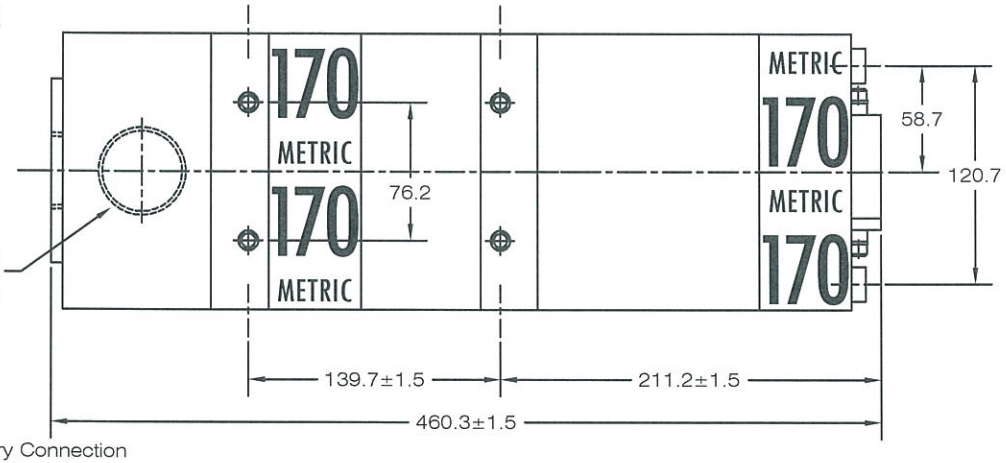

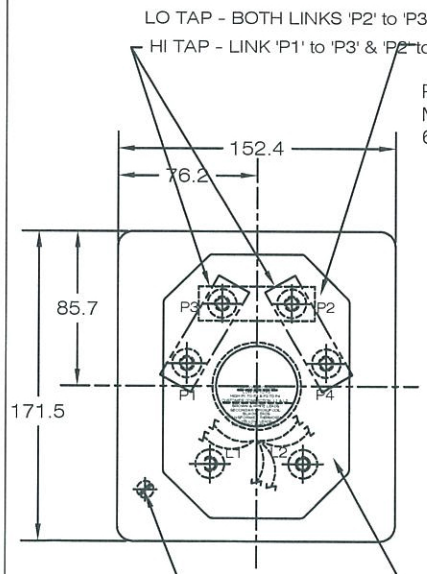

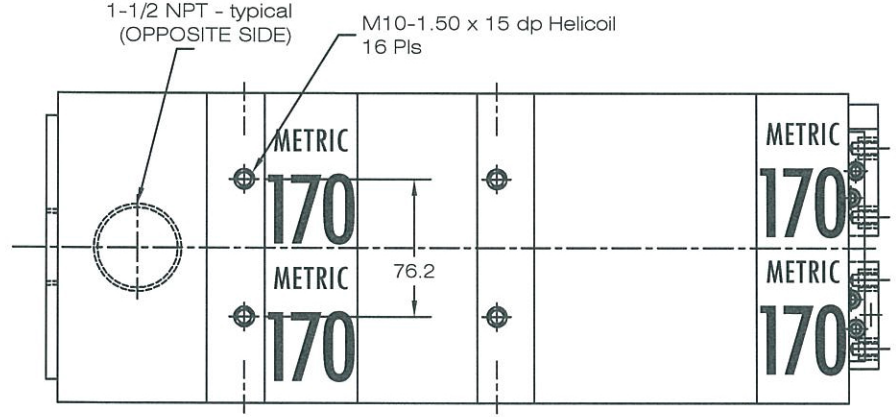

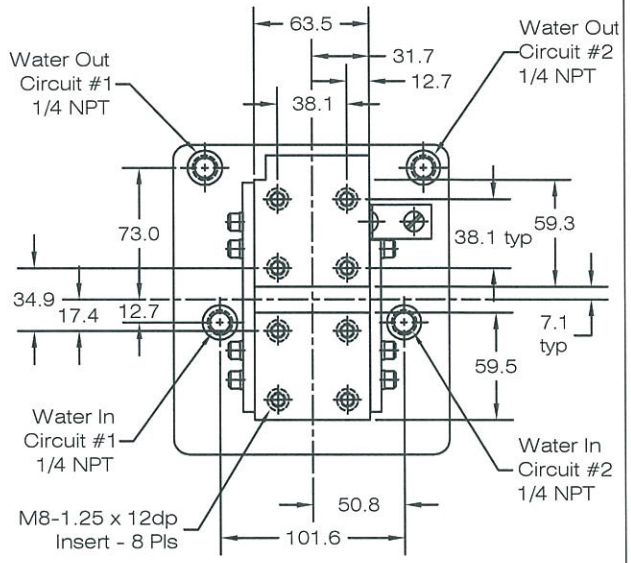

NOTE*
The secondary terminals of this device are intended as an electrical connection only. Applications must be designed to minimize any forces applied to the secondary terminals, this can be accomplished by transferring forces to a structural member.

REV	DESCRIPTION		DATE
AA	ADDED DIM FROM SEC PAD TO MOUNTING HOLE	GMA / KLY	06May11
Z	ADDED LABEL FOR HI/LOW CONN, & THERMO/ROG COIL WIRE COLOR	JSB / KLY	04Mar11
Y	ROTATE PRIMARY HOUSING 180 DEG	TWB / KLY	29JAN10
X	ADDED OVERALL DIMENSION	KLY / KLY	29JAN10

THIS DRAWING AND ALL THE INFORMATION AND TECHNOLOGY IN IT ARE EXCLUSIVE, CONFIDENTIAL AND PROPRIETARY TO RoMan MFG. INC. THIS DRAWING IS OWNED BY RoMan MFG. INC. AND UNLESS SPECIFICALLY AUTHORIZED IN WRITING, NO COPIES SHALL BE MADE OF THIS DRAWING, AND SHALL BE USED ONLY FOR THE LIMITED PURPOSE FOR WHICH IT IS DISCLOSED AND ONLY TO THE BENEFIT OF RoMan MFG. INC., AND IT AND ANY COPIES, AUTHORIZED OR NOT, SHALL BE IMMEDIATELY RETURNED UPON ANY REQUEST THEREFORE.

SCALE: None
DATE: 11/06/1998
RoMan
DRAWN BY: ACG
WEIGHT:

DC Power Supply

DRAWING NUMBER: 1010335

1010335